☐ **OPA-151C** ☐ **OPA-151SS**
☐ **OPA-151ORB** ☐ **OPA-151MB**

Omnipro

Single Handle Pulldown Kitchen Faucet

Product Spec Sheet

Features & Benefits

- This Product Contains Less Than 0.25% Weighted Average Lead Content On Wetted Surfaces
- Metal Lever Handle
- Ceramic Cartridge
- Optional Deck Plate Included
- Max Flow Rate 1.8GPM(6.8L/Min) At 60PSI (ASME A112.18.1/A112.18.1)

OPA-151C
Chrome Finish

OPA-151SS
Stainless Steel Finish

OPA-151ORB
Oil Rubbed Bronze Finish

OPA-151MB
Matte Black Finish

Approvals:

Meets or Exceeds The Following:
* ANSI/ASME A112.18.1/A112.18.1
* NSF/ANSI 61 - Sec. 9
* NSF/ANSI 372
* IAPMO/cUPC
* CA AB1953
* NSF/ANSI/CAN 61 : Q ≤ 1

TEL: 800-217-4603 ***FAX: 877-992-2846***

Visit Our Web Site : www.omniprofaucets.com

☐ OPA-151C ☐ OPA-151SS
☐ OPA-151ORB ☐ OPA-151MB

Omnipro

Single Handle Pulldown Kitchen Faucet

Product Spec Sheet

No.	Name	Part No.
1	Spray head and Hose / *Cabezal rociador y manguera*	RP38241*
2	O-ring / *Aro tórico*	RP60071
3	Wearable ring / *Anillo de uso*	RP70380
4	Cartridge / *Cartucho*	RP20005
5	Bonnet / *Bonete*	RP70394
6	Cap / *Tapa*	RP80028*
7	Screw / *Tornillo*	RP50015
8	Handle / *Llave*	RP13390*
9	Set screw / *Tornillo de jación*	RP50002
10	Flange / *Brida*	RP80463*
11	Escutcheon / *Placa protectora*	RP80461*
12	Gasket / *Junta*	RP80462
13	Bolt / *Perno*	RP50071
14	Mounting nut / *Tuerca de montaje*	RP56036
15	Block / *Bloque*	RP70421
16	O-ring / *Aro tórico*	RP60002
17	Quick connect assembly / *Ensamblaje del conector rápido*	RP70429
18	O-ring / *Aro tórico*	RP60089
19	Weight / *Peso*	RP70441
20	Weight clip / *Sujetador con peso*	RP64204
21	Rubber washer / *Arandela de goma*	RP64023
22	Metal washer / *Arandela metálica*	RP64024
23	Nut / *Tuerca*	RP56075
24	Screw / *Tornillo*	RP50004
25	Hex Allen Wrench / *Hex Llave Allen*	RP70221

* Specify Finish
* Especifíque el Acabado

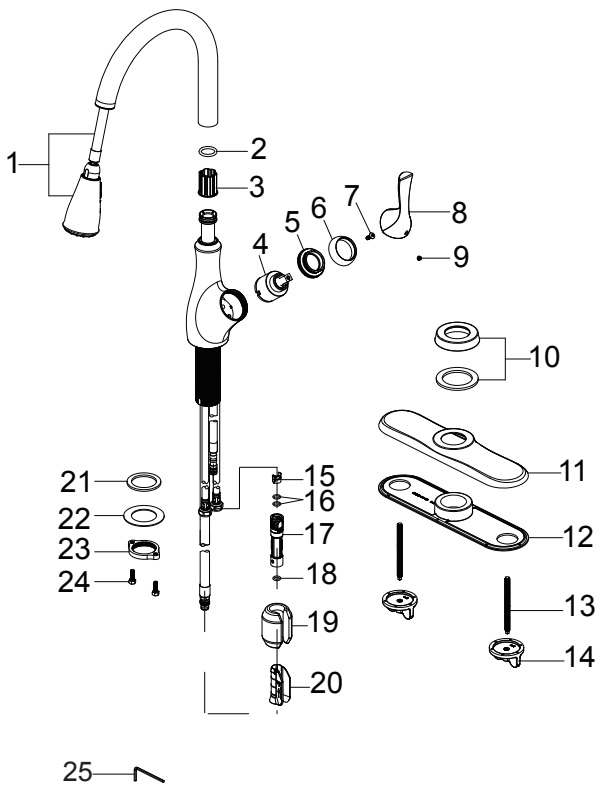

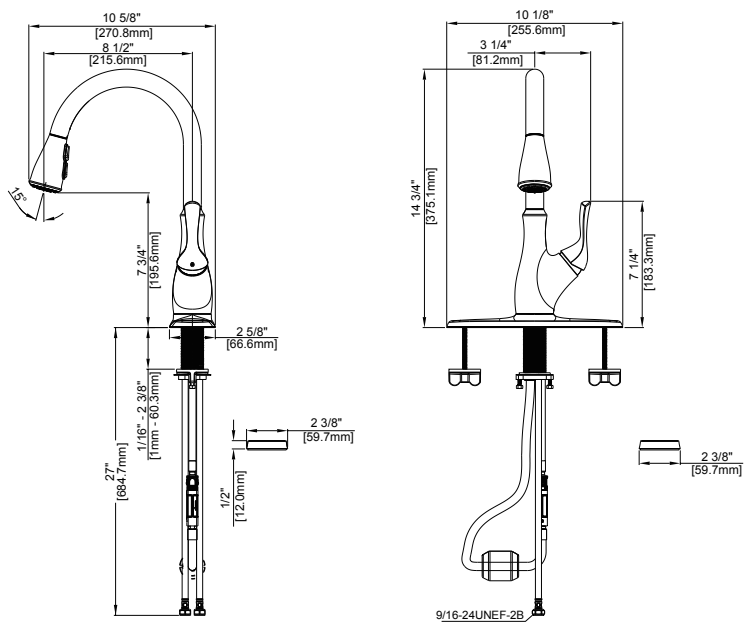

TEL: 800-217-4603 ***FAX: 877-992-2846***

Visit Our Web Site :

www.omniprofaucets.com